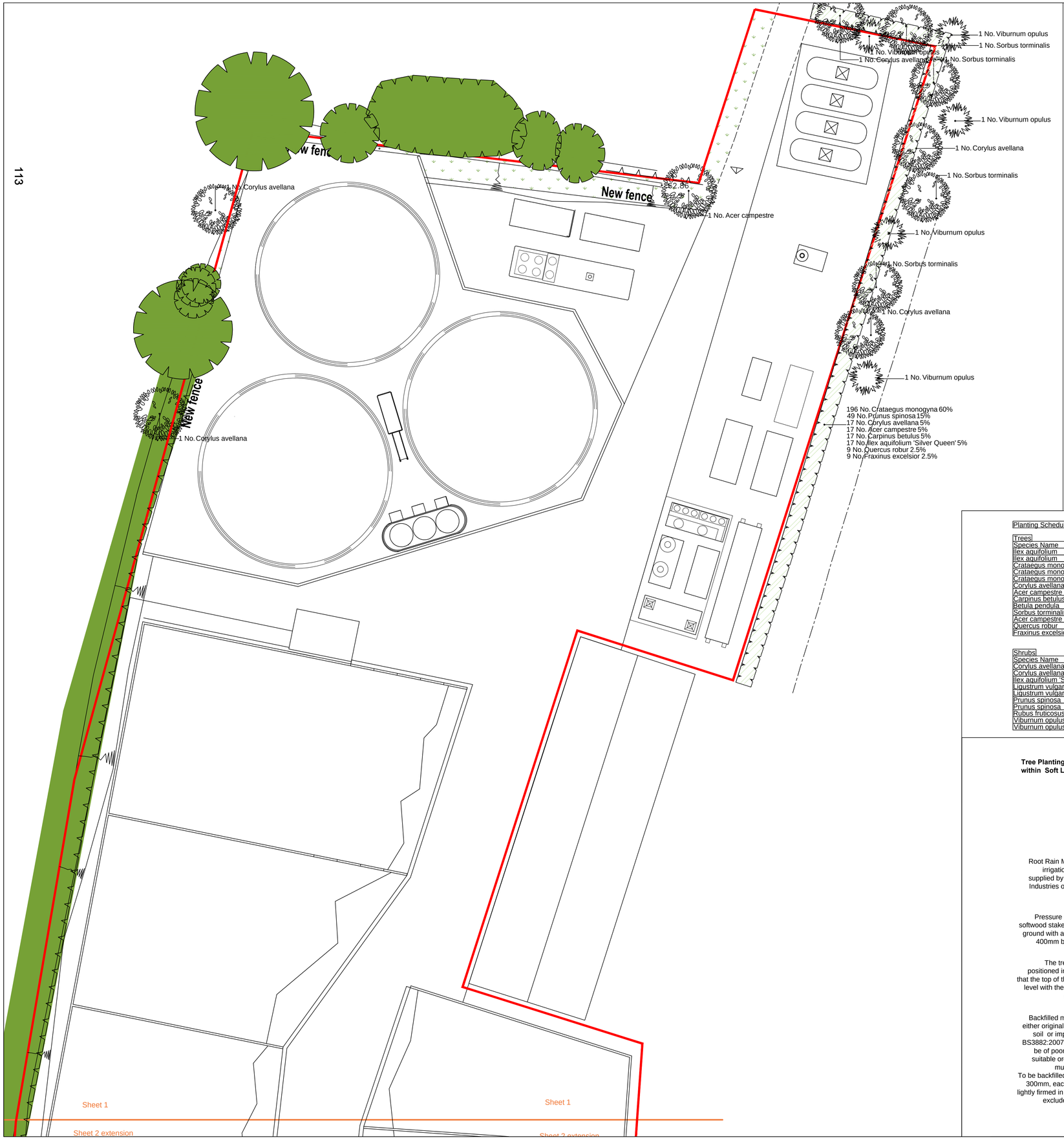

Legend

- Existing trees to be retained and protected during construction
- Proposed tree planting within soft landscape. See detail on sheet 1
- Proposed Hazel tree planting within soft landscape. See detail on sheet 1. To be coppiced in line with management plan PRI19496 M&M
- Proposed mixed native hedge planting to be planted in a double staggered row 300mm apart and at 500mm centres in each row. To be maintained at 1.8m height adjacent to site boundaries
- Proposed native mix shrub planting areas, to be planted in groups of 5-7 specie and to receive a 75mm bark mulch layer after planting operations
- Proposed grassland areas, to be seeded with EM7 grass seed mix as supplied by Emorsgate and sown at 4 grams per msq, or similar and maintained as amenity grass in accordance with management plan PRI19496-M&M
- Proposed grassland areas, to be seeded with EM7 grass seed mix as supplied by Emorsgate and sown at 4 grams per msq, or similar and maintained as long meadowland grassland in accordance with management plan PRI19496-M&M
- +0.5m — Mounding above engineered lagoon bunding, to be height as shown on each mound. To provide natural mounding around the lagoon. Mounds to be graded at a 1:3 slope
- Proposed Barn owl box to be located onto a retained barn as specified within ACD report PRI19496Eco
- Proposed invertebrate log piles within the landscape bund as specified within ACD report PRI19496Eco
- Cut lines

SPECIFICATION
Forestry Commission Practice note 8.
All native species should be of local stock. Native trees and shrubs certified as British Native plant stock.
All planting stock should comply with the Horticultural Trade Association National Plant specification.
All planting preparation, handling, planting & maintenance should be in accordance with CPSE Code for Handling and Establishing plants.
All trees and shrubs to comply with BS 3936 Part 1 1992, planted to BS 4043:1989 and BS 4428:1989.
All works generally, to comply with the written Soft Landscape Specification.
Topsoil incorporated into planting beds to be gently mounded towards the centre of each bed to allow for settlement.
On completion of planting the whole area of the shrub bed shall be mulched with 75mm consolidated thickness of medium textured decorative grade natural pine bark having first been prepared in accordance with the specification.
Free standing hedges shall have a 3 strand galvanised wire and tanalised softwood timber post fence, to BS 1722 Part 2:2000, erected along a line between the two rows of hedge plants.
All existing trees and hedges to be protected in accordance with BS5837:2012 for the duration of the construction period.

NOTE: DO NOT SCALE FROM DRAWING

Planting Schedule

Trees

Species Name	Girth	Height	Density	Specification	No.
Ilex aquifolium		40-60cm	3/m²	Bushy ;3 brks ;C	25 No.
Ilex aquifolium		40-60cm	2/m²	C ;Planted in native buffer mix	14 No.
Crataegus monogyna		60-80cm	3/m²	Transplant ;Bushy ;3 brks ;BR	49 No.
Crataegus monogyna		60-80cm	2/m²	BR ;Planted in native buffer mix	79 No.
Crataegus monogyna		80-100cm	0.5Ctr Double Staggered at 0.3m offset	Transplant ;BR ;Planted as mixed hedge	755 No.
Corylus avellana		80-100cm	0.5Ctr Double Staggered at 0.3m offset	Transplant ;B	64 No.
Acer campestre		80-100cm	0.5Ctr Double Staggered at 0.3m offset	Transplant ;B	64 No.
Carpinus betulus		80-100cm	0.5Ctr Double Staggered at 0.3m offset	Transplant ;B	64 No.
Betula pendula		100-125cm	2/m²	Feather ;BR ;Planted in native buffer mix	14 No.
Sorbus torminalis	6-8cm	150-175cm	Counted	Half Standard ;B	12 No.
Acer campestre	10-12cm	300-350cm	Counted	Standard ;Clear Stem 175-200 ;2x ;RB	1 No.
Quercus robur	10-12cm	300-350cm	0.5Ctr Double Staggered at 0.3m offset	Standard ;Clear Stem 175-200 ;2x ;RB	34 No.
Fraxinus excelsior	10-12cm	300-350cm	0.5Ctr Double Staggered at 0.3m offset	Standard ;Clear Stem 175-200 ;2x ;RB	34 No.

Shrubs

Species Name	Height	Pot Size	Specification	Density	No.
Corylus avellana	60-80cm		1+2 ;Branched ;B	Counted	15 No.
Corylus avellana	60-80cm		BR ;Planted in native buffer mix	2/m²	79 No.
Ilex aquifolium 'Silver Queen'	30-40cm	3L	Bushy ;C	0.5Ctr Double Staggered at 0.3m offset	64 No.
Ligustrum vulgare	60-80cm		Branched ;3 brks ;BR	3/m²	49 No.
Ligustrum vulgare	60-80cm		BR ;Planted in native buffer mix	2/m²	79 No.
Prunus spinosa	80-100cm		Branched ;BR ;Planted as native hedge	0.5Ctr Double Staggered at 0.3m offset	190 No.
Prunus spinosa	60-80cm		1+1 ;Branched ;B	3/m²	49 No.
Rubus fruticosus	40-60cm	3L	Branched ;3 brks ;C	3/m²	25 No.
Viburnum opulus	40-60cm	3L	Branched ;3 brks ;C	3/m²	49 No.
Viburnum opulus	60-80cm		1+1 ;Branched ;B	Counted	11 No.

Tree Planting Pit Detail within Soft Landscape

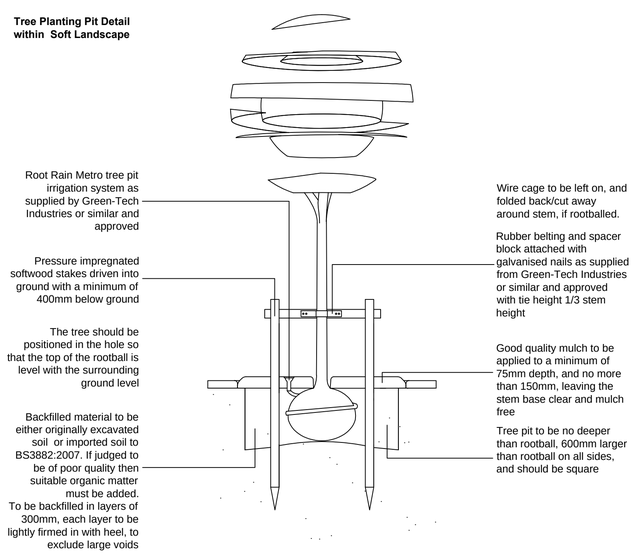

All components as supplied from GreenBlue Urban or similar and approved

Rev	Date	Details	Drawn
E	23.07.15	Client comments	AB
D	23.07.15	Client comments	AB
C	22.07.15	LPA comments	AB
B	15.07.15	Client comments	AB
A	14.07.15	Layout revisions	AB

ACD
Ecology
Archaeology
Arboriculture
Landscape Architecture

ACD Landscape Architect & ACD Ecology & ACD Archaeology
Rodbourne Rail Business Centre, Grange Lane,
Malmesbury, SN16 0ES
Tel: 01666 825646

ACD Arboriculture
Courtyard House, Mill Lane, Godalming, GU7 1EY
Tel: 01483 425714

ACD (Landscape Architects) Southampton
12 Southgate Street, winchester, SO23 9EF
Tel: 01965 855604

www.acdlandscape.co.uk

Bradbeer Planning Limited
Bradbeer Commercial and Rural Planning and Development

scheme: Hill Farm, Jouldings Lane, Farley Hill
client: Bradbeer Planning Ltd
drawing: Landscape Proposals
date: March 2015
scale: 1:200@A1
drawing no: PRI19496 11E Sheet 1 of 2
drawn: AB checked: JC

Copyright of ACD Landscape Architects Ltd. All rights described in Chapter IV of the Copyright, Designs and Patents Act 1988 have been generally asserted: 2011. Copyright of this plan remains with ACD until all fees have been paid in full.

This page is intentionally left blank